SLAVIA
WALL LIGHT
Direct | Surface

SLAVIA WALL LIGHT by Divinity Lights is a compact and contemporary wall-mounted architectural luminaire designed to create a striking up-and-down lighting effect on exterior surfaces. Its robust housing with customizable RAL colour options complements modern architectural environments while providing both functional and decorative illumination.

Powered by high-quality LEDs with CRI ≥80, available in 2700K, 3000K, 4000K, RGB, and RGBW , the luminaire delivers efficient performance at 38 lm/W with beam-angle options of 360°. With IP65 protection, it is suitable for outdoor applications and is available with non-dimmable or DALI-dimmable driver options.

Measuring 110mm Dia and 51.7mm Height, SLAVIA is designed for direct wall-surface mounting. Its focused upward and downward illumination makes it suitable for building façades, entrance walls, exterior corridors, terraces, balconies, hospitality spaces, pathways and architectural feature walls, creating an elegant wash of light while enhancing the character of the structure.

Divinity Lights provides customized lighting solutions according to the specific requirements of each project, including suitable colour finishes, lighting performance and application needs.

Single Line Diagram

Surface Mounted

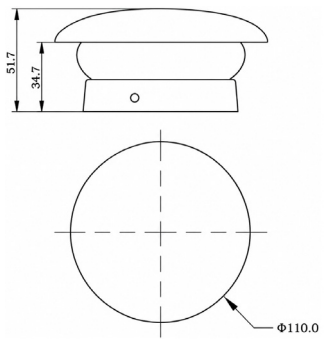

SLAVIA WALL LIGHT

INPUT VOLTAGE 220-240V AC | IP65 | CRI >80

Quick Info

Mounting Type
Wall Surface

Material Colour
Customize RAL available

Protection mode
IP65

Driver Details
Dali Dimmable, Non Dimmable, DMX Controller
Power Factor (PF) -0.95
THD- <10%
UGR - <19

LED
CCT- 2700K, 3000K, 4000K, RGB, RGBW
CRI- ≥ 80
Life Span - L70@50000h
MacAdam - ≤3 SDCM

Beam Angle
360°

Optics
Lens

Efficacy
38lm/W

Electrical
Wattage - 6W
Input Voltage- 220-240V AC

Physical Dimensions
Dia- 110mm
Dia- 51.7mm

divinity lights

Address: Plot No-A-89, RIICO Industrial Area, Karoli, Bhiwadi, Rajasthan 301019.

www.divinitylights.com